Year 9 notes part 5

nb: In lessons we leave imperial and compound units until *after* the area and volume calculations. For ease of revision, I have included all the unit material here and put the area and volume calculations in Part 6.

- Units of measurement (not in 9H book)

Contents

Units

When a number is followed by a unit, the unit tell us two things:

(a) What kind of physical quantity it is (is it <u>length</u>, <u>area</u>, <u>time</u> … ?)

(b) How big it is.

We can distinguish between

- Units for different types of thing (a volume unit is different to a speed unit. If you ask in a shop for 5 miles/hour of milk you will get a funny look)
- Various units that all basically measure the same thing (metres, inches, feet, yards, fathoms, miles are all length measurements and we can easily convert one into another).
- Sub-divisions of units (millimetres and centimetres are just little bits of a metre)

e.g. 5 days, 3 minutes, 8 hours, 12 years are all periods of time.

15 m, 23 miles, 4", 100 light years are all lengths or distances.

Rules of units

(i) We can only convert a measurement from one unit to another <u>of the same kind</u>, for instance:

- 5 miles = 8 km (both length)
- 120 minutes = 2 hours (both time)

(ii) We can only add or subtract measurements with the same units, for instance

- 1 m + 1 cm = 100 cm + 1 cm = 101 cm, OK

  but
- 1 kg + 1 hour = complete nonsense (what unit would we give the answer?)

(iii) When we multiply or divide measurements, we multiple (or divide) the numbers <u>and multiply (or divide) the units too</u>:

- 2 m × 3 m = 6 m^2
- $\frac{10\text{ m}}{2\text{ s}} = 5\text{ m/s}$

Types of measurement and their units

Time	year, month, week, day, hour, minute, second
Length	metre, mile, yard, foot, inch, light year
Speed	m/s, km/h, mph, knot.
Area	m^2, $inch^2$, square mile, acre, hectare
Volume	m^3, litre, pint, gallon, barrel
Volume flow rate	m^3/s, gpm (gallons per minute)
Fuel consumption	litres/km, mpg (miles per gallon)
Mass	kg, ton, tonne, pound (lbm), ounce
Mass flow rate	kg/s
Force	Newton (N), lbf
Pressure	N/m^2 (= Pascal), bar, psi (= lbf/square inch)
Energy	Nm (= J), ft.lbf
Power (energy transfer rate)	Watt (1W=1J/s), horsepower
Density	kg/m^3

Imperial and metric units

For thousands of years, people used units that were pretty roughly defined. An inch for instance (supposedly the length of the tip of one's thumb) could vary from country to country and be anywhere between 19 and 29 mm.

These old units have come to be known as "imperial" units.

In 1799 the French adopted a metric system that used multiples of the metre for all measurements instead of following the imperial practice of having large numbers of different length units. This became known as the Système Internationale (S.I.).

It only has powers of 10 as multiples, as opposed to the 12, 14 and 16 found in the imperial system.

In 1960 this metric system was defined in terms of international standards and adopted worldwide. There are 7 basic SI units:

- Metre (length)
- Kilogram (mass)
- Second (time)
- Ampere (electric current, eg 13 amp fuse)
- Kelvin (temperature, eg absolute zero is 0 Kelvin)
- Candela (brightness of a light, roughly one candle!)
- Mole (a counting number like a couple or dozen but much larger, 6.02×10^{23})

All the other metric units are derived from these (Length ÷ time gives speed in metres/second, for instance).

Multiples of metric units

All metric units can take <u>prefixes</u> that make them into bigger or smaller units. There are lots of these!

The list goes (and there are more at each end!):

Prefix	Multiplies by	example
Giga	$\times10^{9}$	1 giga-watt-hour (a lot of energy)
Mega	$\times10^{6}$	1 megawatt (the power output of a large lorry engine)
Kilo	$\times1000$	1 kilogram (1000 grams), 1 kilometre (1000 metres)
Deci	$\times0.1$	1 dm = 10 cm, 1 decimetre^3 (same as a litre)
Centi	$\times0.01$	1 centimetre = $\frac{1}{100}$ m
Milli	$\times0.001$	1 millimetre = $\frac{1}{1000}$ m, 1 milligram = $\frac{1}{1000}$ g,
Micro	$\times10^{-6}$	1 micrometer = 1 millionth of a metre
Nano	$\times10^{-9}$	1 nanometre, nanogram etc
Pico	$\times10^{-12}$	1 picofarad, picosecond etc

You only need to know kilo-, centi- and milli- but the others will help you make sense of things you read about or hear.

Imperial units of length

There are lots of units for length

Imperial (you only need to know the **bold** ones):

1 inch is now defined as being exactly 25.4 mm.

12" (inches) = 1 foot

3 feet = 1 yard

6 feet = 1 fathom

440 yards = 1 furlong (quarter of a mile)

1760 yards = 1 mile (=5280 feet)

6080 feet = 1 nautical mile (so 1 knot = 1 nautical mile per hour)

(and very historically, 1 cubit = 0.5 yard, 1 chain = 22 yards = 4 rods).

Also in astronomy, a light year is the distance light travels in a year = about 6 million million miles and a parsec is 3.26 light-years.

Metric

10 mm = 1 cm

1000 mm = 100 cm = 1m

1000 m = 1 km

Conversions

Nb. You don't have to remember exact values, just approximate conversions

1 inch = 25.4mm = 2.54 cm

1 foot = 30.48 cm = 0.3048 m and 1 metre $\approx$ 3.2808 feet = 39.3 inches

1 mile = 1.6 km (so 5 miles = 8 kilometres)

Imperial units of mass

(commonly called "weight" in GCSE questions).

Imperial units

16 ounces (oz) = 1 pound (lb)

14 pounds = 1 stone

112 pounds = 8 stone = 1 hundredweight (cwt)

2240 pounds = 20 hundredweight = 1 ton

Metric

1000 kg = 1 tonne

Conversion, metric mass to imperial mass:

1 kilogram = 2.2 pounds (1 kg = 2.2 lb), 1 pound = 453 grams = 0.453 kg

Imperial units of volume

20 fluid ounces (the volume of 20 ounces of water) = 1 pint

(nb an American pint = 16 fluid ounces so American pints and gallons are smaller than UK ones).

2 pints = 1 quart

8 pints = 1 gallon

1 "barrel" of oil = 42 US gallons = about 35 British gallons. Nowadays the barrels one sees are usually larger, a typical metal barrel being 44 UK gallons or 55 US gallons:

1 gallon = 4.545 litres

A petrol container is about 1 gallon

Memory aids

- A short ruler is 6", about 150 mm
- A long ruler is 1 foot, 12 ", about 300 mm
- If you are 6 foot tall, that is 1.83 m
- A 4 m wide roll of carpet will fit a room 13 feet wide.

- Runners who manage the "4 minute mile" are doing 1600 m in 4 minutes so 400 m/minute, equivalent to 100 m in 15 seconds (or 15 mph, miles per hour)
- A good cyclist can do 25 miles in one hour (25 mph) which is 11.1 metres/second.
- A Boeing 747 flies at 565 miles per hour (910 km/h). It is 70 m (231 feet) long, 64 m (211 feet) wingspan and weighs 180 tonnes (empty).

- A mouse weighs between 10 and 25 grams (0.3 to 0.9 ounce)
- 4 apples weigh about 1 pound
- A small bag of sugar weighs about 1 pound (453 grams)
- An 11 stone person weighs 154 lbs which is 70 kg.
- Most cars weigh between 800 and 1400 kg (0.8 to 1.4 tonnes)
- An African elephant can weigh up to 5400 kg.
- A 53 seater coach weighs about 11 tonnes.

- Plastic milk bottles hold 0.5 (short bottle), 1 (common tall) or 2 litres (wide tall).
- *"A pint of water is a pound and a quarter,*

  A litre is a pint and three quarters"

  (meaning 1 pint = 20 fluid ounces, 1 litre = 1.76 pints).

Must remember:

- **1 kg = 2.2 pounds**
- **1 litre = 1.76 pints**
- **1 mile = 1.6 km**
- **1 metre = 39.3 inches**
- **25.4 mm = 1 inch (exactly)**

Length units – visual comparisons

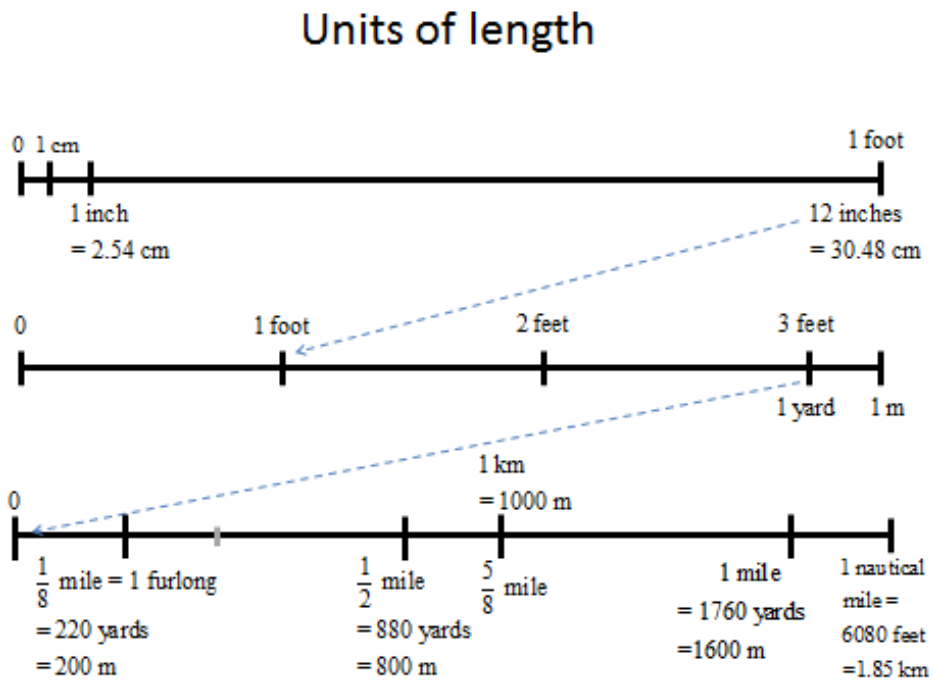

Area units – visual comparisons

Solar panels, 40 m^2.

Football pitch, area 1.76 acres
= 7140 square metres = 105 m by 68 m.

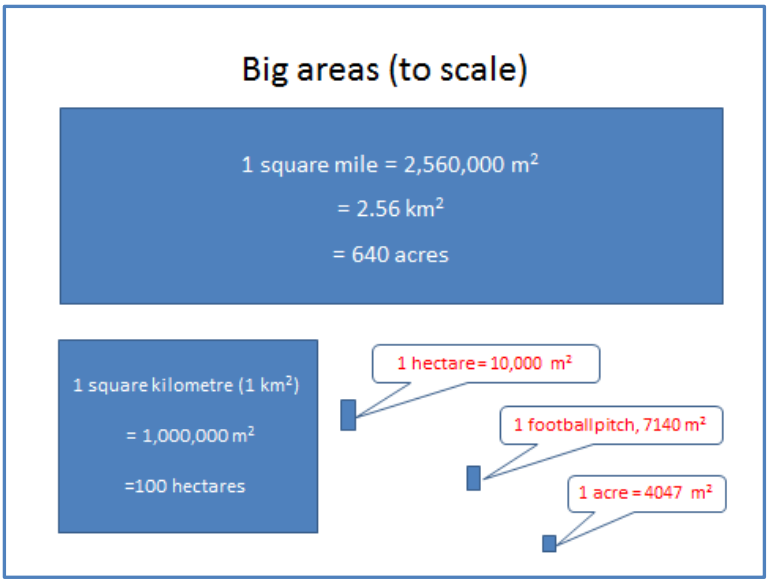
Big areas (to scale)
1 square mile = 2,560,000 m²
= 2.56 km²
= 640 acres
1 square kilometre (1 km²)
= 1,000,000 m²
=100 hectares
1 hectare = 10,000 m²
1 football pitch, 7140 m²
1 acre = 4047 m²

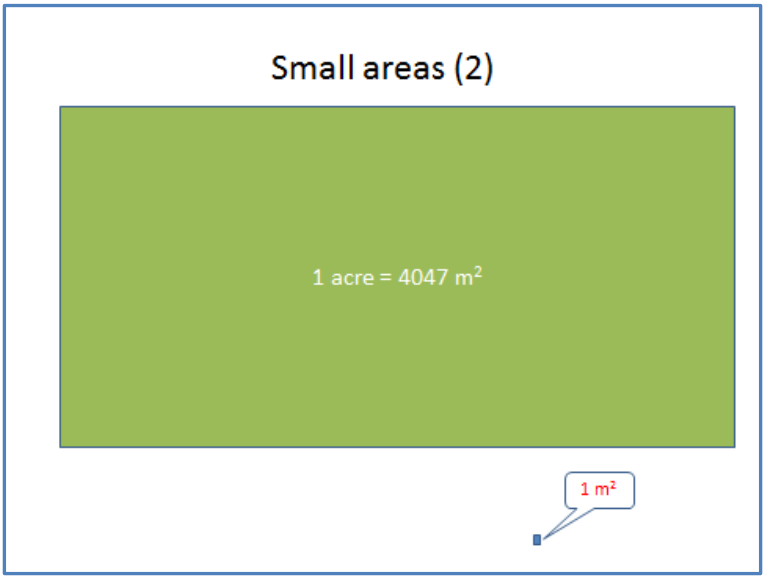
Small areas (2)
1 acre = 4047 m²
1 m²

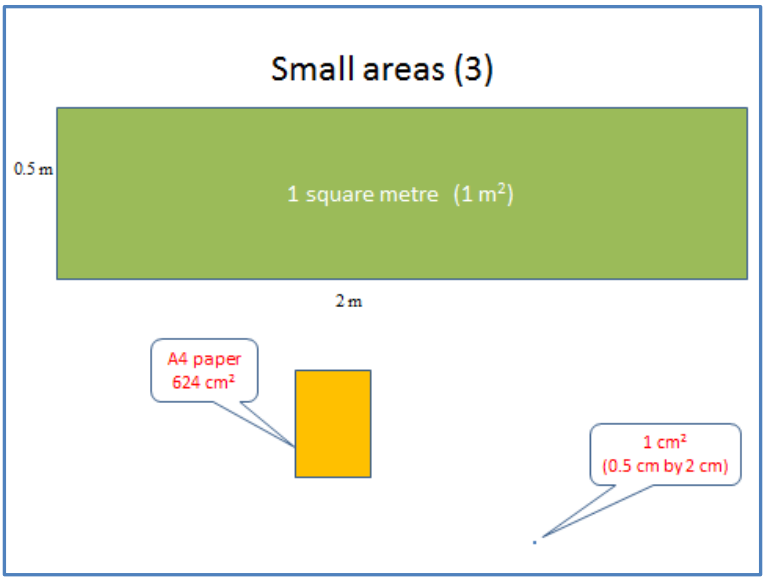
Small areas (3)
0.5 m
1 square metre (1 m²)
2 m
A4 paper
624 cm²
1 cm²
(0.5 cm by 2 cm)

A vineyard, area 10 acres

(40500 square metres, 0.0405 km^2).

"A farmhouse with 67 acres"

- Banbury covers an area of about 12 km^2.

Great Britain,

Area 244,000 km^2.

Population density 255 people per square kilometre.

Area conversion factors

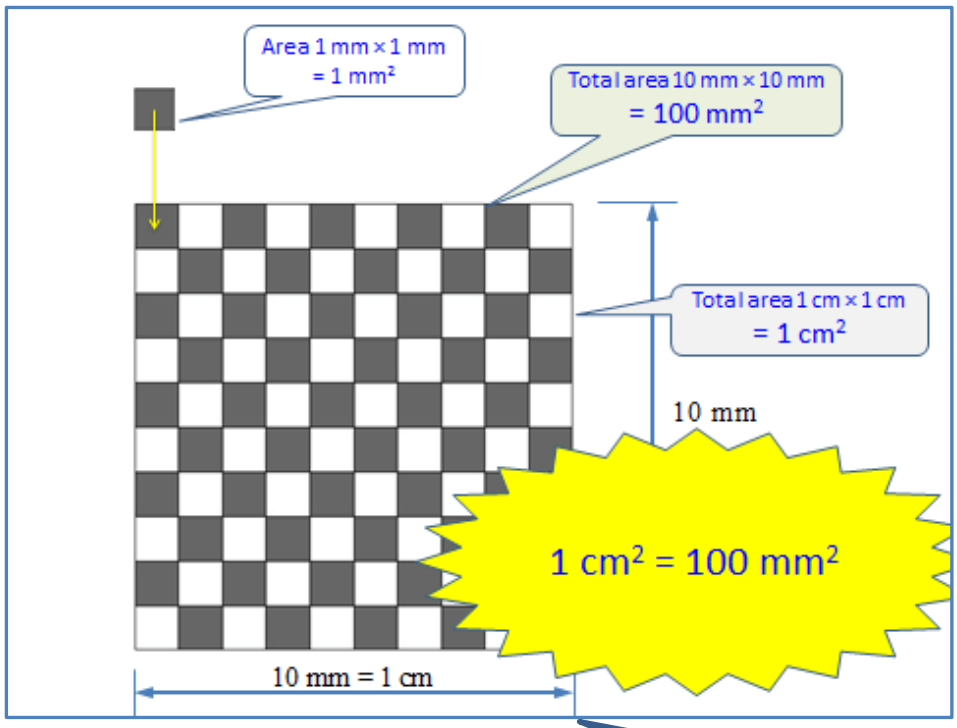

If drawn actual size, these are quite small:

1 mm²

100 mm² = 1 cm²

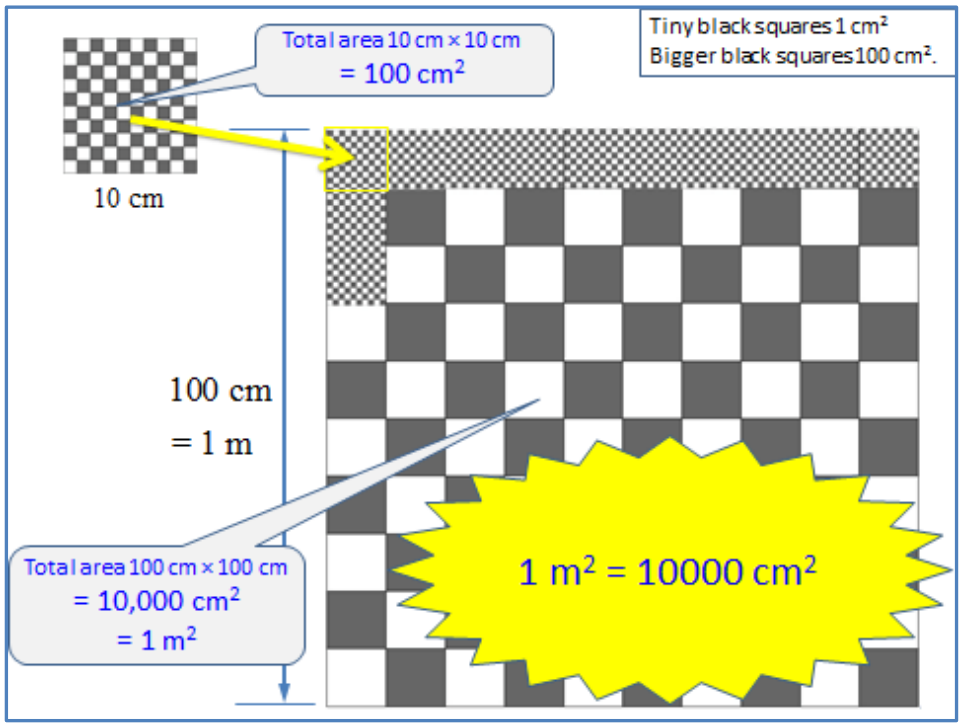

Just to help you remember:

Length	Area
km -> m, × 1000	km² -> m², × 1,000,000
m -> mm, × 1000	m² -> mm², × 1,000,000
m -> cm, × 100	m² -> cm², × 10,000
cm -> mm, × 10	cm² -> mm², × 100

(and divide to go the other way).

Really you are multiplying by a "unit multiplier" e.g.

$$2\ \text{cm}^2 = 2\ \text{cm}^2 \times \boxed{\frac{100\ \text{mm}^2}{1\ \text{cm}^2}} = 200\ \text{mm}^2$$

Volume units – conversion factors

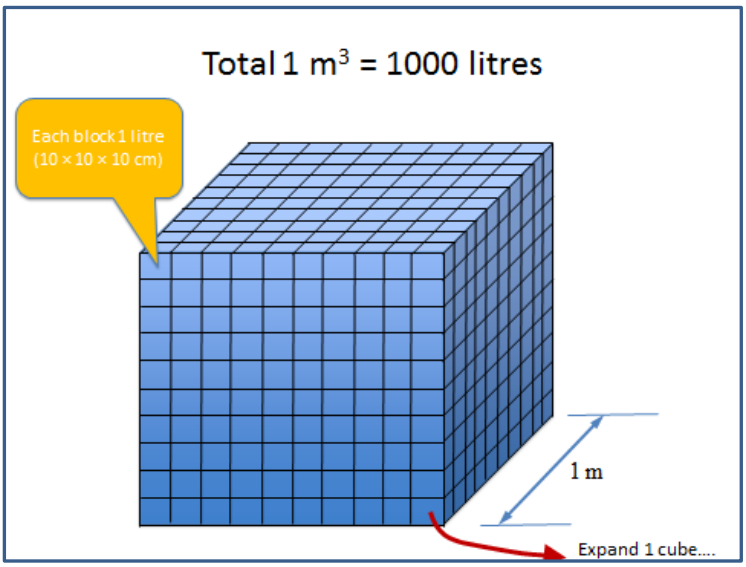

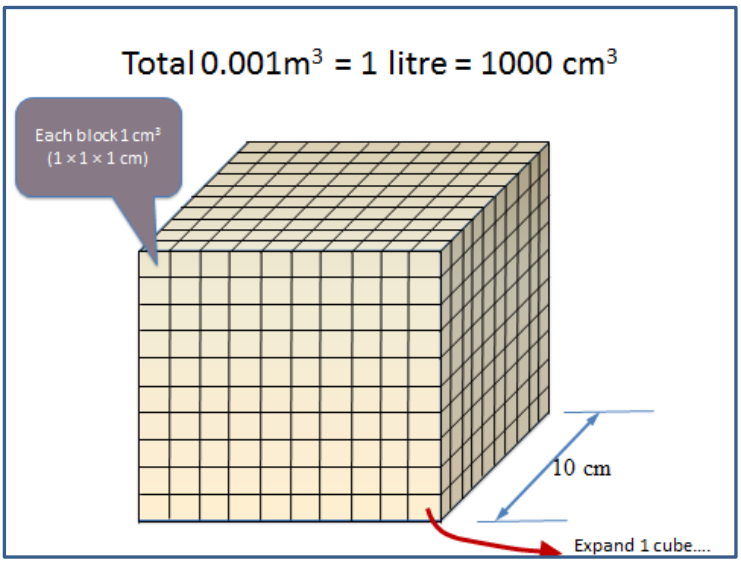

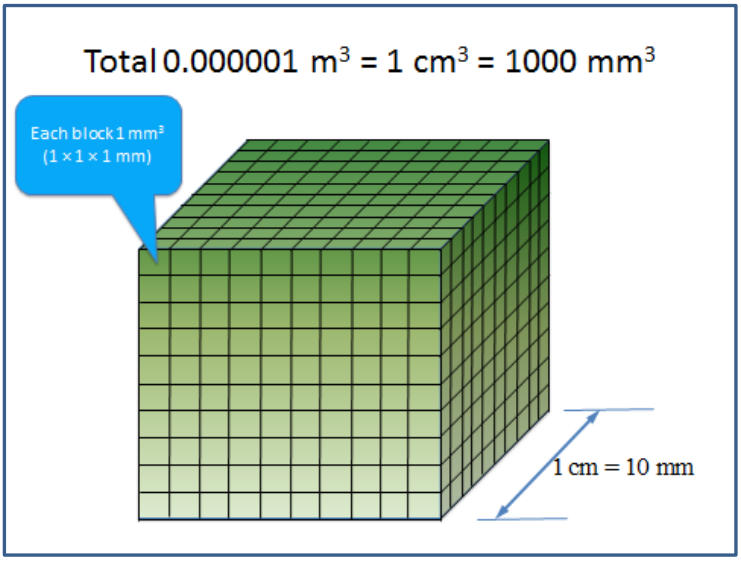

Remember:

Length	Volume
km -> m, × 1000	km³ -> m³, × 1,000,000,000
m -> mm, × 1000	m³ -> mm³, × 1,000,000,000
m -> dm, × 10	m³ -> litres, × 1000
dm -> cm, × 10	litres -> cm³, × 1000
m -> cm, × 100	m³ -> cm³, × 1000,000
cm -> mm, × 10	cm³ -> mm³, × 1000

(and divide to go the other way).

Really you are multiplying by a "unit multiplier" e.g.

$$2\ \text{cm}^3 = 2\ \text{cm}^3 \times \boxed{\frac{1000\ \text{mm}^3}{1\ \text{cm}^3}} = 2000\ \text{mm}^3$$

"Unitary form"

Sometimes in functional skills questions we are asked to choose which item to purchase – which is the best value?

We need to calculate the price <u>per item</u>, price <u>per unit mass</u> or price <u>per unit volume</u>. This is known as converting the prices to unitary form.

Example

One can buy baked beans in 560 gram tins (42p), 750 gram tins (60p) and 2 kg tins (£1.50). Which is the best value?

Size	0.56 kg	0.75 kg	2 kg
Cost	£0.42	£0.6	£1.4
Cost £/kg	$\frac{£0.42}{0.56} = £0.75\ /\text{kg}$	$\frac{£0.6}{0.75} = £0.8\ /\text{kg}$	$\frac{£1.4}{2\text{kg}} = £0.7\ /\text{kg}$

Unit conversion factors (units of same type but different names)

To convert a measurement from one system of units to another, we can use two methods:

- Scaling up
- Multiplying by a "unit multiplier"

They basically do the same thing. The unit multiplier is a more powerful method for complicated problems.

Example 1

Convert 20 cm into millimetres

Scaling method

"remember that 1 cm = 10 mm"

$$20\text{ cm} = 20 \times 1\text{ cm} = 20 \times 10\text{ mm} = 200\text{ mm}$$

(Of course, with practice you just multiply by 10 and change the units)

Unit multiplier method

Multiply by a unit conversion factor that = 1 (so the measurement itself does not get bigger or smaller) but which includes the old and new units (so the new units appear and new units disappear).

We remember that 1 cm = 10 mm so $\frac{10\text{ mm}}{1\text{ cm}}$ is a fraction that = 1.

This means we can multiply by it without changing the length.

We calculate $20\text{ cm} = 20\text{ cm} \times \frac{10\text{ mm}}{1\text{ cm}} = 200\text{ mm}$

The unwanted units cancel out top & bottom

Example 2

A brain surgeon wants to fill his aeroplane with petrol. He needs 60 gallons but has to buy it in litres. How many litres does he need?

Scaling method

"remember that 1 gallon = 4.545 litres"

$$60 \text{ gallons} = 60 \times 1 \text{ gallon} = 60 \times 4.545 \text{ litres} = 272.7 \text{ litres}$$

Unit multiplier method

Multiply by a unit conversion factor that = 1 (so the measurement itself does not get bigger or smaller) but which includes the old and new units (so the new units appear and new units disappear).

We remember that 1 gallon = 4.545 litres so $\frac{4.545 \text{ litres}}{1 \text{ gallon}}$ is a fraction that = 1.

We can multiply by it without changing the volume (or divide by $\frac{1 \text{ gallon}}{4.545 \text{ litres}}$).

We calculate $60 \text{ gallons} = 60 \text{ gallons} \times \frac{4.545 \text{ litres}}{1 \text{ gallon}} = 272.7 \text{ litres}$ (note how the "gallons" units on the top and bottom cancel out, leaving litres as the units).

What happens if you get it wrong!

Compound units

Speed, distance and time

$S = \frac{\mathrm{D}}{T}$, $ST = D$, $T = \frac{D}{S}$

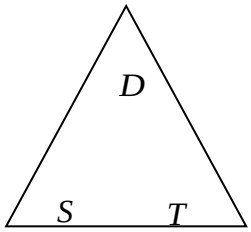

Examples (check these on your calculator!)

- I jog 3 miles in 24 minutes, what is my average speed in (a) miles/hour, (b) metres/second

  (a) $S = \frac{\mathrm{D}}{T} = \frac{3 \text{ miles}}{\left(\frac{24}{60}\right) \text{ hour}} = 7.5 \text{ miles per hour}$

  (b) 1 mile = 1600 metres so

  $$S = \frac{\mathrm{D}}{T} = \frac{3 \times 1600 \text{ metres}}{24 \times 60 \text{ seconds}} = 3\frac{1}{3} \text{ m/s}$$

- I swim for 10 minutes at 0.7 metres per second, how far do I get?

  $ST = D$
  10 minutes = 600 seconds,
  0.7 m/s ×600 seconds = 0.7×600 metres = 420 metres.

- I want to cycle 25 miles and can cycle at 15 miles/hour, how long will it take me?

  $$T = \frac{D}{S} = \frac{25 \text{ miles}}{15 \text{ miles/hour}} = \frac{25}{15} \text{ hours} = 1\frac{2}{3} \text{ hours} = \text{ 1 hour 40 minutes}$$

Density (using volume to find mass).

The "density" of a material is the mass of a 1 m^3 volume of it.

eg. **(1)** The density of cast iron is 7800 kg/m^3. A sailing yacht has ballast weights of volume $\frac{1}{100}\ \mathrm{m}^3$. How much does each weight weigh?

Mass = $0.01 \times 7800 = 78$ kg

Some typical densities (for interest):

Steel	7840 kg/m^3 = 7.84 kg/litre
Aluminium	2700 kg/m^3 = 2.7 kg/litre
Water	1000 kg/m^3 = 1 kg/litre
Air	1.3 kg/m^3 = 0.0013 kg/litre

(2) People in the UK eat 400000 tonnes of chocolate per annum. If chocolate has density 1333 kg/ cubic m, what volume is this?

Mass = volume * density, volume = mass/density = 300 cubic metres.